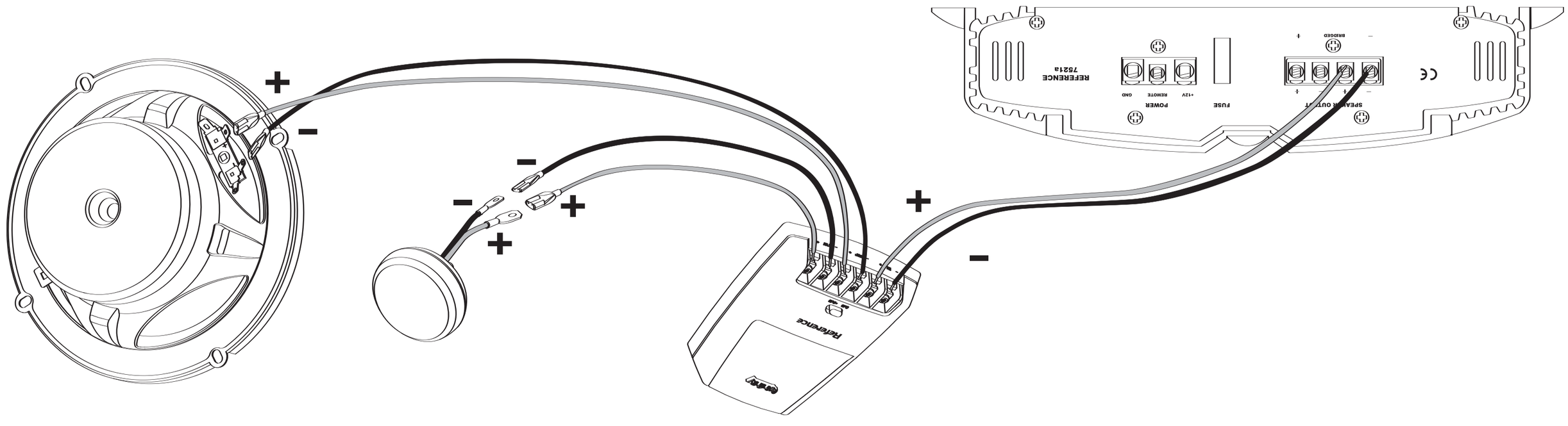

	5030cs
BL (T-m)	3.50
DCR (ohms)	2.30
Mms (g)	10.86
Sd (sq cm)	103.9
Cms (µm/N)	528
Vas (l)	8.00
Fs (Hz)	66.5
Qes	0.85
Qms	6.27
Qt	0.75

SPECIFICATIONS

	5030cs
Type:	5-1/4" (130mm) 2-Way Component
Impedance:	2 Ohms
Power Handling, RMS:	75W
Power Handling, Peak:	225W
Frequency Response:	67Hz – 21kHz
Sensitivity (2.83V, 1m):	92dB

WARRANTY: Reference Series speakers are warranted against defects. The duration of the speaker's warranty depends on the laws in the country in which it was purchased. Your local Infinity car audio retailer can help you determine the length of your warranty. To register your product, please visit us at www.infinitysystems.com.

SPECIFICATIONS

	5030cs
Type:	5-1/4" (130mm) 2-Way Component
Impedance:	2 Ohms
Power Handling, RMS:	75W
Power Handling, Peak:	225W
Frequency Response:	67Hz – 21kHz
Sensitivity (2.83V, 1m):	92dB

WARRANTY: Reference Series speakers are warranted against defects. The duration of the speaker's warranty depends on the laws in the country in which it was purchased. Your local Infinity car audio retailer can help you determine the length of your warranty. To register your product, please visit us at www.infinitysystems.com.

SPECIFICATIONS

	5030cs
Type:	5-1/4" (130mm) 2-Way Component
Impedance:	2 Ohms
Power Handling, RMS:	75W
Power Handling, Peak:	225W
Frequency Response:	67Hz – 21kHz
Sensitivity (2.83V, 1m):	92dB

WARRANTY: Reference Series speakers are warranted against defects. The duration of the speaker's warranty depends on the laws in the country in which it was purchased. Your local Infinity car audio retailer can help you determine the length of your warranty. To register your product, please visit us at www.infinitysystems.com.

SPECIFICATIONS

	5030cs
Type:	5-1/4" (130mm) 2-Way Component
Impedance:	2 Ohms
Power Handling, RMS:	75W
Power Handling, Peak:	225W
Frequency Response:	67Hz – 21kHz
Sensitivity (2.83V, 1m):	92dB

WARRANTY: Reference Series speakers are warranted against defects. The duration of the speaker's warranty depends on the laws in the country in which it was purchased. Your local Infinity car audio retailer can help you determine the length of your warranty. To register your product, please visit us at www.infinitysystems.com.

SPECIFICATIONS

	5030cs
Type:	5-1/4" (130mm) 2-Way Component
Impedance:	2 Ohms
Power Handling, RMS:	75W
Power Handling, Peak:	225W
Frequency Response:	67Hz – 21kHz
Sensitivity (2.83V, 1m):	92dB

WARRANTY: Reference Series speakers are warranted against defects. The duration of the speaker's warranty depends on the laws in the country in which it was purchased. Your local Infinity car audio retailer can help you determine the length of your warranty. To register your product, please visit us at www.infinitysystems.com.

SPECIFICATIONS

	5030cs
Type:	5-1/4" (130mm) 2-Way Component
Impedance:	2 Ohms
Power Handling, RMS:	75W
Power Handling, Peak:	225W
Frequency Response:	67Hz – 21kHz
Sensitivity (2.83V, 1m):	92dB

WARRANTY: Reference Series speakers are warranted against defects. The duration of the speaker's warranty depends on the laws in the country in which it was purchased. Your local Infinity car audio retailer can help you determine the length of your warranty. To register your product, please visit us at www.infinitysystems.com.

SPECIFICATIONS

	5030cs
Type:	5-1/4" (130mm) 2-Way Component
Impedance:	2 Ohms
Power Handling, RMS:	75W
Power Handling, Peak:	225W
Frequency Response:	67Hz – 21kHz
Sensitivity (2.83V, 1m):	92dB

WARRANTY: Reference Series speakers are warranted against defects. The duration of the speaker's warranty depends on the laws in the country in which it was purchased. Your local Infinity car audio retailer can help you determine the length of your warranty. To register your product, please visit us at www.infinitysystems.com.

SPECIFICATIONS

	5030cs
Type:	5-1/4" (130mm) 2-Way Component
Impedance:	2 Ohms
Power Handling, RMS:	75W
Power Handling, Peak:	225W
Frequency Response:	67Hz – 21kHz
Sensitivity (2.83V, 1m):	92dB

WARRANTY: Reference Series speakers are warranted against defects. The duration of the speaker's warranty depends on the laws in the country in which it was purchased. Your local Infinity car audio retailer can help you determine the length of your warranty. To register your product, please visit us at www.infinitysystems.com.

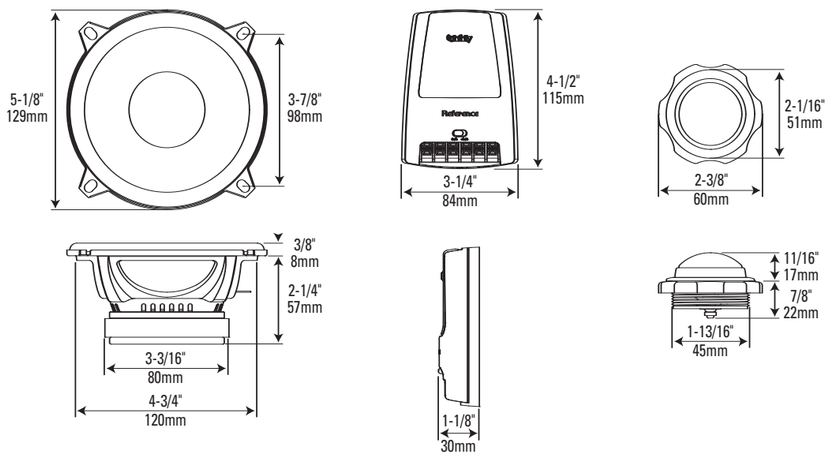

Designed and engineered in the USA. Conception et design aux É.U.A.
A valid serial number is required for warranty coverage. Un numéro de série valable est exigé pour la couverture de la garantie.
Features, specifications and appearance are subject to change without notice.
Les dispositifs, les caractéristiques et l'aspect sont sujets au changement sans communication préalable.
Harman Consumer Group, Inc., 250 Crossways Park Drive, Woodbury, NY 11797 USA
www.infinitysystems.com
© 2009 Harman International Industries, Incorporated. All rights reserved. Tous droits réservés. • Part No. REF5030CSOM1/09
Infinity is a trademark of Harman International Industries, Incorporated, registered in the United States and/or other countries.
I-Mount is a trademark of Harman International Industries, Incorporated.
Infinity est une marque commerciale de Harman International Industries, Incorporated, déposée aux États-Unis et/ou dans d'autres pays.
I-Mount est une marque commerciale de Harman International Industries, Incorporated.

Infinity Harman International

Declaration of Conformity

CE

We, Harman Consumer Group, Inc.
2, route de Tours
72500 Château du Loir
France

declare in own responsibility that the product described in this owner's manual is in compliance with technical standards:

EN 61000-6-3:2001
EN 61000-6-1:2001

Klaus Lebherz
Harman Consumer Group, Inc.
Château du Loir, France 1/09

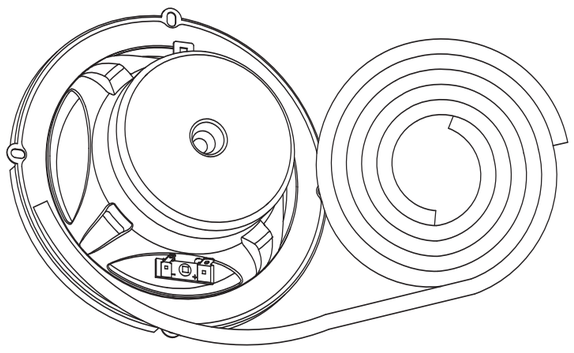

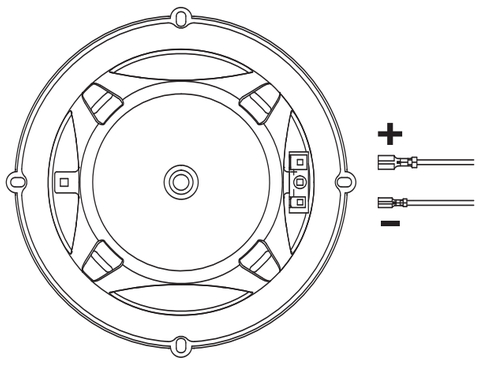

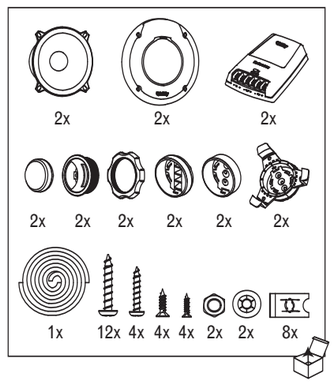

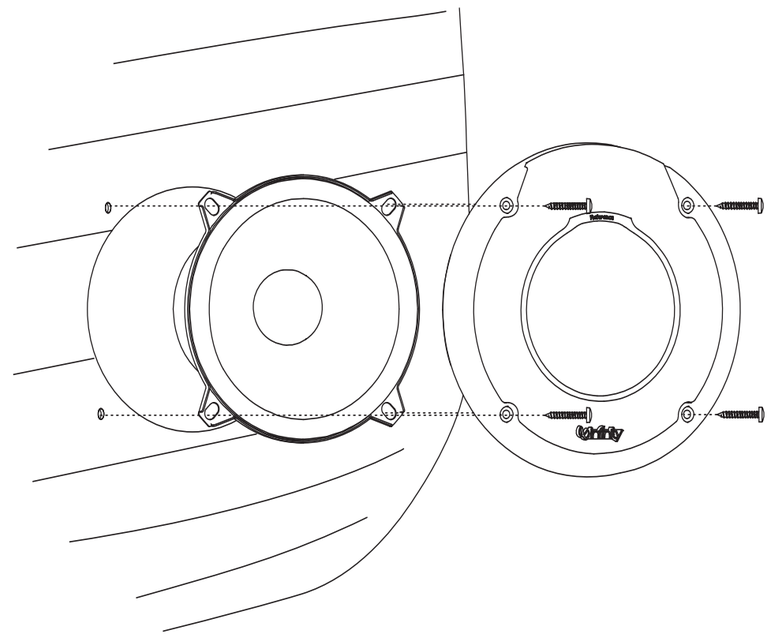

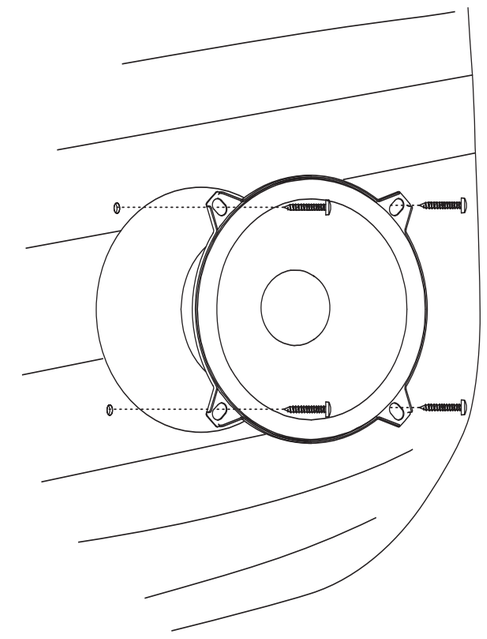

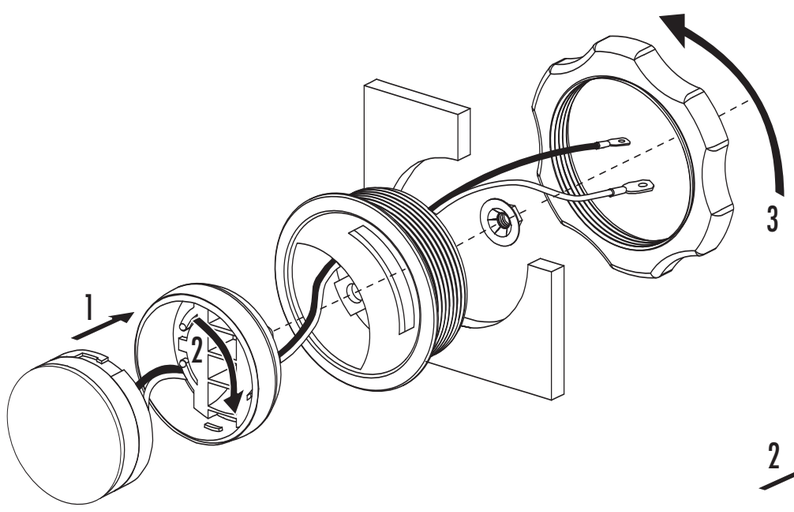

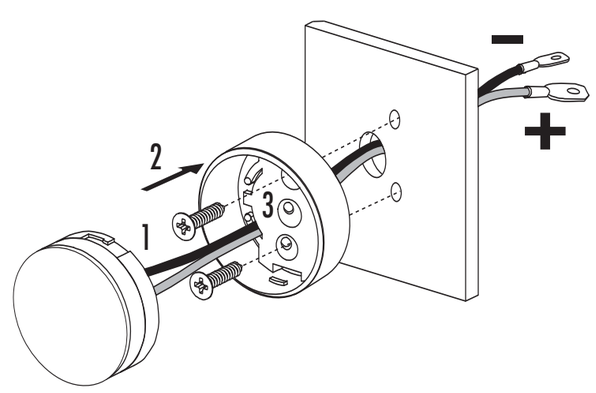

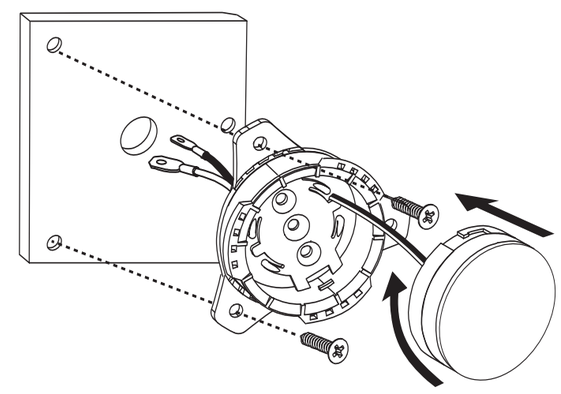

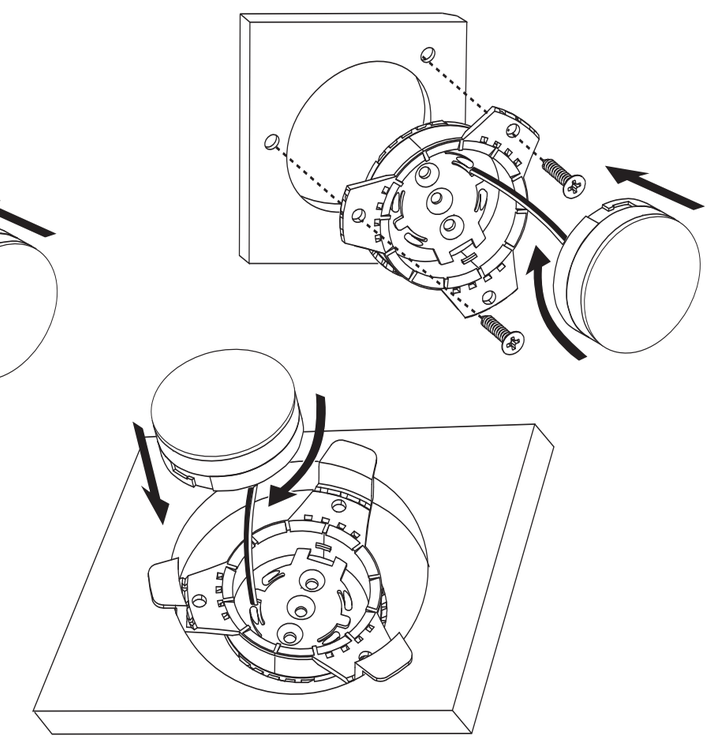

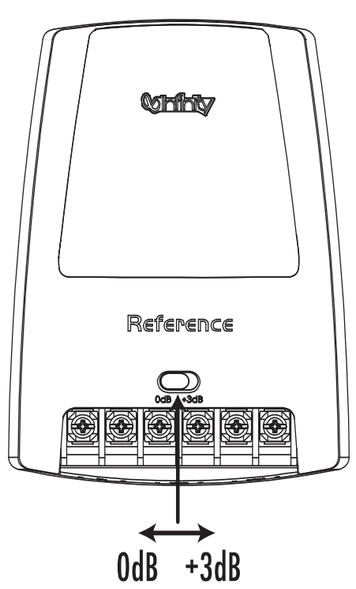

TWEETER-LEVEL CONTROL
This speaker system is equipped with a tweeter-level switch. The normal setting for this switch is the "0dB" position, which provides an apparently "flat" response. Tweeter output may be increased according to the user's preference, or to compensate for off-axis placement (where the speaker does not directly face the listening position), by setting the switch to the "+3dB" position.

TWEETER-LEVEL CONTROL
This speaker system is equipped with a tweeter-level switch. The normal setting for this switch is the "0dB" position, which provides an apparently "flat" response. Tweeter output may be increased according to the user's preference, or to compensate for off-axis placement (where the speaker does not directly face the listening position), by setting the switch to the "+3dB" position.

TWEETER-LEVEL CONTROL
This speaker system is equipped with a tweeter-level switch. The normal setting for this switch is the "0dB" position, which provides an apparently "flat" response. Tweeter output may be increased according to the user's preference, or to compensate for off-axis placement (where the speaker does not directly face the listening position), by setting the switch to the "+3dB" position.

TWEETER-LEVEL CONTROL
This speaker system is equipped with a tweeter-level switch. The normal setting for this switch is the "0dB" position, which provides an apparently "flat" response. Tweeter output may be increased according to the user's preference, or to compensate for off-axis placement (where the speaker does not directly face the listening position), by setting the switch to the "+3dB" position.

TWEETER-LEVEL CONTROL
This speaker system is equipped with a tweeter-level switch. The normal setting for this switch is the "0dB" position, which provides an apparently "flat" response. Tweeter output may be increased according to the user's preference, or to compensate for off-axis placement (where the speaker does not directly face the listening position), by setting the switch to the "+3dB" position.

TWEETER-LEVEL CONTROL
This speaker system is equipped with a tweeter-level switch. The normal setting for this switch is the "0dB" position, which provides an apparently "flat" response. Tweeter output may be increased according to the user's preference, or to compensate for off-axis placement (where the speaker does not directly face the listening position), by setting the switch to the "+3dB" position.

TWEETER-LEVEL CONTROL
This speaker system is equipped with a tweeter-level switch. The normal setting for this switch is the "0dB" position, which provides an apparently "flat" response. Tweeter output may be increased according to the user's preference, or to compensate for off-axis placement (where the speaker does not directly face the listening position), by setting the switch to the "+3dB" position.

TWEETER-LEVEL CONTROL
This speaker system is equipped with a tweeter-level switch. The normal setting for this switch is the "0dB" position, which provides an apparently "flat" response. Tweeter output may be increased according to the user's preference, or to compensate for off-axis placement (where the speaker does not directly face the listening position), by setting the switch to the "+3dB" position.

TWEETER-LEVEL CONTROL
This speaker system is equipped with a tweeter-level switch. The normal setting for this switch is the "0dB" position, which provides an apparently "flat" response. Tweeter output may be increased according to the user's preference, or to compensate for off-axis placement (where the speaker does not directly face the listening position), by setting the switch to the "+3dB" position.

TWEETER-LEVEL CONTROL
This speaker system is equipped with a tweeter-level switch. The normal setting for this switch is the "0dB" position, which provides an apparently "flat" response. Tweeter output may be increased according to the user's preference, or to compensate for off-axis placement (where the speaker does not directly face the listening position), by setting the switch to the "+3dB" position.

TWEETER-LEVEL CONTROL
This speaker system is equipped with a tweeter-level switch. The normal setting for this switch is the "0dB" position, which provides an apparently "flat" response. Tweeter output may be increased according to the user's preference, or to compensate for off-axis placement (where the speaker does not directly face the listening position), by setting the switch to the "+3dB" position.

TWEETER-LEVEL CONTROL
This speaker system is equipped with a tweeter-level switch. The normal setting for this switch is the "0dB" position, which provides an apparently "flat" response. Tweeter output may be increased according to the user's preference, or to compensate for off-axis placement (where the speaker does not directly face the listening position), by setting the switch to the "+3dB" position.

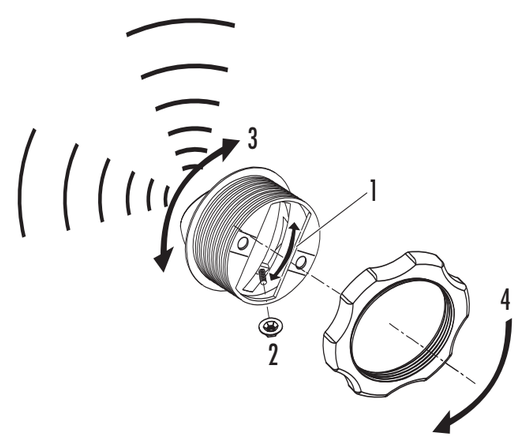

ROTATING TWEETER
This component system includes the I-Mount™ (patent no. 5,859,917) feature, an extremely versatile tweeter-mounting system, which is designed to allow the tweeter to be aimed toward the listening position. Since the tweeter's output becomes directional at extremely high frequencies, aiming the tweeter toward the listening position will improve high-frequency response and stereo imaging. Refer to the mounting diagrams. With the tweeter mounted in the proper location, rock the tweeter element in the slot and rotate the entire assembly to aim the tweeter toward the listening position. Secure the small nut to lock the angle, then tighten the large hand nut to lock the rotational position.

ROTATING TWEETER
This component system includes the I-Mount™ feature, an extremely versatile tweeter-mounting system, which is designed to allow the tweeter to be aimed toward the listening position. Since the tweeter's output becomes directional at extremely high frequencies, aiming the tweeter toward the listening position will improve high-frequency response and stereo imaging. Refer to the mounting diagrams. With the tweeter mounted in the proper location, rock the tweeter element in the slot and rotate the entire assembly to aim the tweeter toward the listening position. Secure the small nut to lock the angle, then tighten the large hand nut to lock the rotational position.

ROTATING TWEETER
This component system includes the I-Mount™ feature, an extremely versatile tweeter-mounting system, which is designed to allow the tweeter to be aimed toward the listening position. Since the tweeter's output becomes directional at extremely high frequencies, aiming the tweeter toward the listening position will improve high-frequency response and stereo imaging. Refer to the mounting diagrams. With the tweeter mounted in the proper location, rock the tweeter element in the slot and rotate the entire assembly to aim the tweeter toward the listening position. Secure the small nut to lock the angle, then tighten the large hand nut to lock the rotational position.

ROTATING TWEETER
This component system includes the I-Mount™ feature, an extremely versatile tweeter-mounting system, which is designed to allow the tweeter to be aimed toward the listening position. Since the tweeter's output becomes directional at extremely high frequencies, aiming the tweeter toward the listening position will improve high-frequency response and stereo imaging. Refer to the mounting diagrams. With the tweeter mounted in the proper location, rock the tweeter element in the slot and rotate the entire assembly to aim the tweeter toward the listening position. Secure the small nut to lock the angle, then tighten the large hand nut to lock the rotational position.

ROTATING TWEETER
This component system includes the I-Mount™ feature, an extremely versatile tweeter-mounting system, which is designed to allow the tweeter to be aimed toward the listening position. Since the tweeter's output becomes directional at extremely high frequencies, aiming the tweeter toward the listening position will improve high-frequency response and stereo imaging. Refer to the mounting diagrams. With the tweeter mounted in the proper location, rock the tweeter element in the slot and rotate the entire assembly to aim the tweeter toward the listening position. Secure the small nut to lock the angle, then tighten the large hand nut to lock the rotational position.

ROTATING TWEETER
This component system includes the I-Mount™ feature, an extremely versatile tweeter-mounting system, which is designed to allow the tweeter to be aimed toward the listening position. Since the tweeter's output becomes directional at extremely high frequencies, aiming the tweeter toward the listening position will improve high-frequency response and stereo imaging. Refer to the mounting diagrams. With the tweeter mounted in the proper location, rock the tweeter element in the slot and rotate the entire assembly to aim the tweeter toward the listening position. Secure the small nut to lock the angle, then tighten the large hand nut to lock the rotational position.

ROTATING TWEETER
This component system includes the I-Mount™ feature, an extremely versatile tweeter-mounting system, which is designed to allow the tweeter to be aimed toward the listening position. Since the tweeter's output becomes directional at extremely high frequencies, aiming the tweeter toward the listening position will improve high-frequency response and stereo imaging. Refer to the mounting diagrams. With the tweeter mounted in the proper location, rock the tweeter element in the slot and rotate the entire assembly to aim the tweeter toward the listening position. Secure the small nut to lock the angle, then tighten the large hand nut to lock the rotational position.

ROTATING TWEETER
This component system includes the I-Mount™ feature, an extremely versatile tweeter-mounting system, which is designed to allow the tweeter to be aimed toward the listening position. Since the tweeter's output becomes directional at extremely high frequencies, aiming the tweeter toward the listening position will improve high-frequency response and stereo imaging. Refer to the mounting diagrams. With the tweeter mounted in the proper location, rock the tweeter element in the slot and rotate the entire assembly to aim the tweeter toward the listening position. Secure the small nut to lock the angle, then tighten the large hand nut to lock the rotational position.

ROTATING TWEETER
This component system includes the I-Mount™ feature, an extremely versatile tweeter-mounting system, which is designed to allow the tweeter to be aimed toward the listening position. Since the tweeter's output becomes directional at extremely high frequencies, aiming the tweeter toward the listening position will improve high-frequency response and stereo imaging. Refer to the mounting diagrams. With the tweeter mounted in the proper location, rock the tweeter element in the slot and rotate the entire assembly to aim the tweeter toward the listening position. Secure the small nut to lock the angle, then tighten the large hand nut to lock the rotational position.

ROTATING TWEETER
This component system includes the I-Mount™ feature, an extremely versatile tweeter-mounting system, which is designed to allow the tweeter to be aimed toward the listening position. Since the tweeter's output becomes directional at extremely high frequencies, aiming the tweeter toward the listening position will improve high-frequency response and stereo imaging. Refer to the mounting diagrams. With the tweeter mounted in the proper location, rock the tweeter element in the slot and rotate the entire assembly to aim the tweeter toward the listening position. Secure the small nut to lock the angle, then tighten the large hand nut to lock the rotational position.

ROTATING TWEETER
This component system includes the I-Mount™ feature, an extremely versatile tweeter-mounting system, which is designed to allow the tweeter to be aimed toward the listening position. Since the tweeter's output becomes directional at extremely high frequencies, aiming the tweeter toward the listening position will improve high-frequency response and stereo imaging. Refer to the mounting diagrams. With the tweeter mounted in the proper location, rock the tweeter element in the slot and rotate the entire assembly to aim the tweeter toward the listening position. Secure the small nut to lock the angle, then tighten the large hand nut to lock the rotational position.

ROTATING TWEETER
This component system includes the I-Mount™ feature, an extremely versatile tweeter-mounting system, which is designed to allow the tweeter to be aimed toward the listening position. Since the tweeter's output becomes directional at extremely high frequencies, aiming the tweeter toward the listening position will improve high-frequency response and stereo imaging. Refer to the mounting diagrams. With the tweeter mounted in the proper location, rock the tweeter element in the slot and rotate the entire assembly to aim the tweeter toward the listening position. Secure the small nut to lock the angle, then tighten the large hand nut to lock the rotational position.